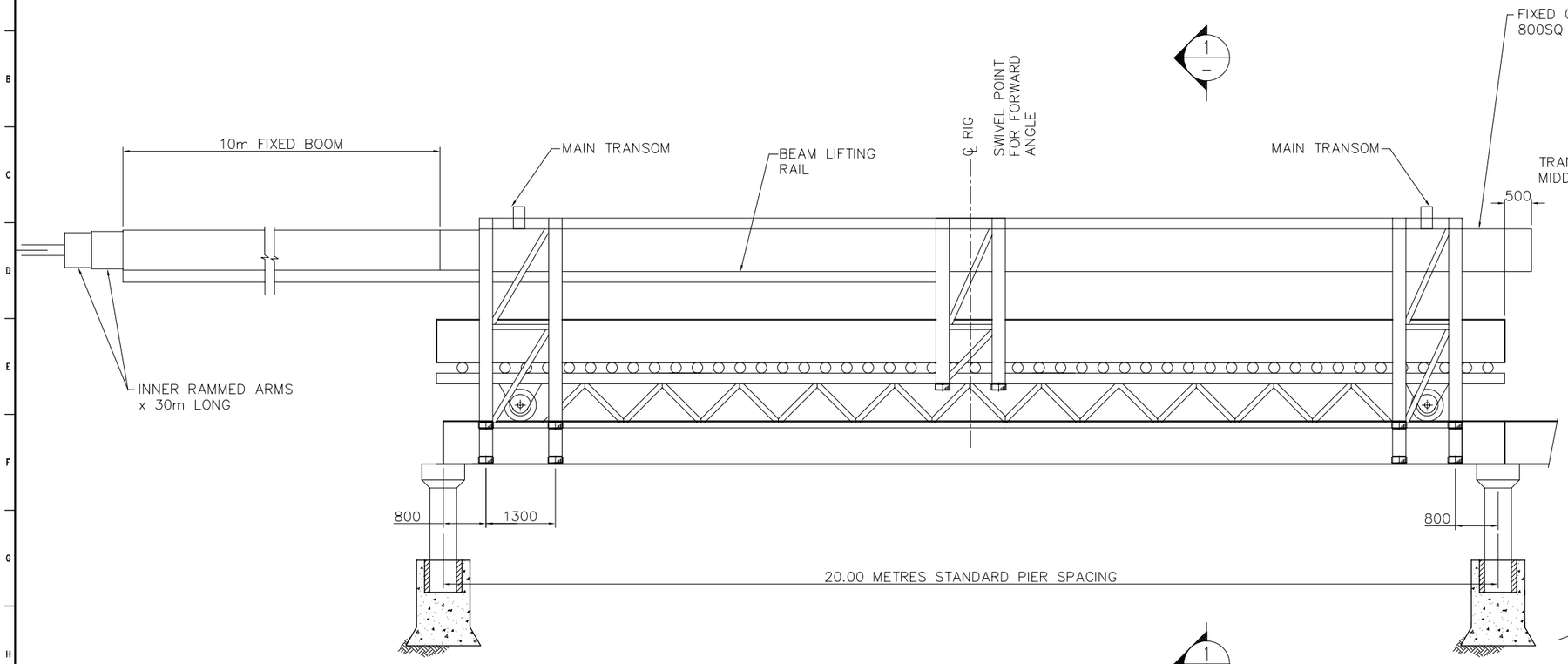

SAMPLE
ELEVATION ON MONORAIL
BEAM PLACEMENT RIG
Indicative Only
SCALE 1:50

STRUCTURAL SIZES TO BE CONFIRMED BY DESIGN

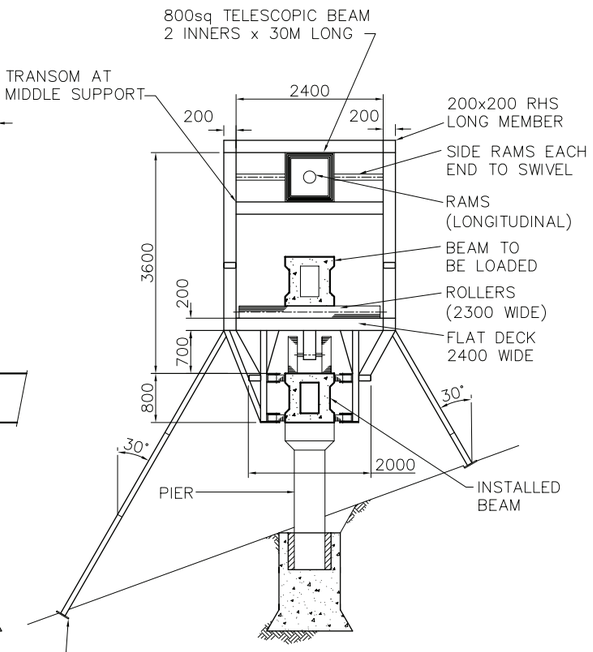

SECTION 1 SAMPLE

X–SECTION ON MONORAIL
BEAM PLACEMENT RIG
Indicative Only
SCALE 1:50

PRELIMINARY ONLY
NOT FOR CONSTRUCTION

DRAWING NO. 94475–SK–

PREPARED BY:
AC Consulting Group
P.O. BOX 2934, WELLINGTON

COPY RIGHT © AC CONSULTING GROUP LTD. 2003
ALL RIGHTS RESERVED. UNAUTHORISED REPRODUCTION PROHIBITED

REV	Description	DGN	DATE	DWN	DATE	CHKD	DATE	QC	DATE	APP	DATE
A	ISSUED FOR EIA	IS	5/04	SJW	5/04						

DESIGNED	I STEWART	12/03
DRAWN	SJW	12/03
CHECKED		
QC CHK'D		
APPROVED		

PLOT DATE May 26, 2006 – 2:50pm

PREPARED BY
AC Consulting Group
Consulting Engineers
P O BOX 2934 WELLINGTON TEL 472 3377 FAX 472 3423

RIVERSTONE HOLDINGS LTD
PO BOX 398
WANAKA

STEWART CONSULTING SERVICES
2 GRAHAM STREET
DUNEDIN
PH 027 4303 533

THE FIORDLAND LINK EXPERIENCE

CONSTRUCTION METHODOLGY
DETAILS BEAM PLACEMENT RIG

ORIGINAL SCALE 1:50

DRAWING NO.

JOB No	SHEET No	REV
94475	SK4	A

P:\THE FIORDLAND LINK\94475–SK–

1 : 1 1 : 2 1 : 5 1 : 250

A1